Super Stud™ Building Products, Inc.

SAFTI SEAL™

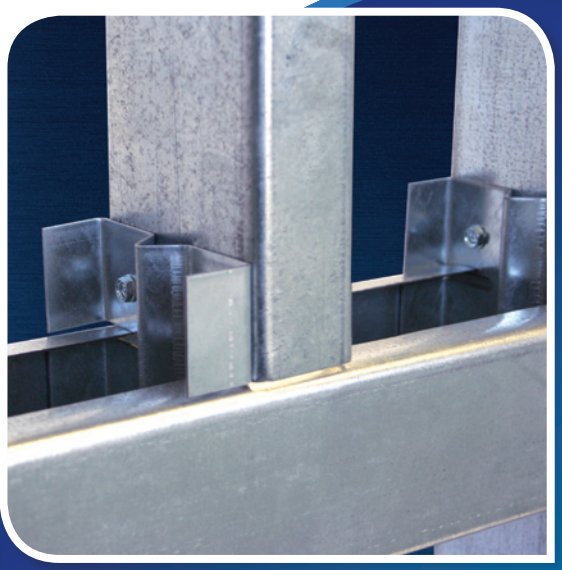

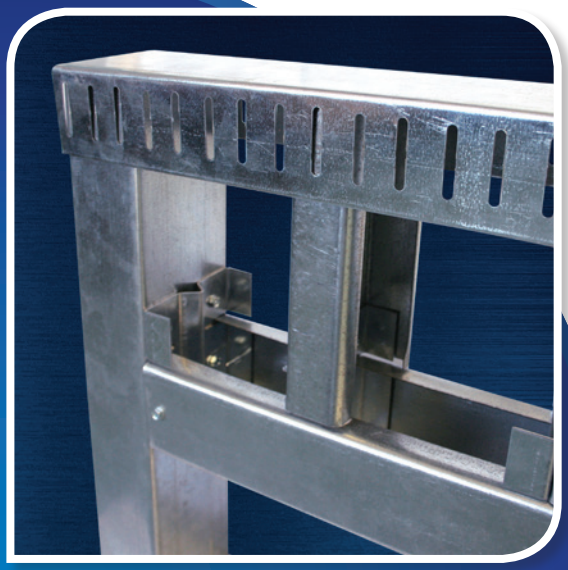

Now available through Super Stud Building Products, Inc. • To order: 800-477-7883 www.buysuperstud.com
Additional Technical Information: Safti-Seal 425-869-2811 or Super Stud: 732-662-6220

Super Stud™ Building Products, Inc.

SAFTI SEAL™

HJC CLIP

(HEADER, JAMB, AND CRIPPLE)

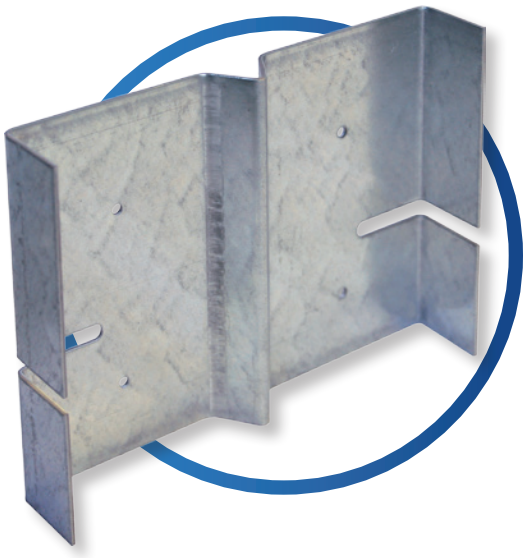

- Utilize Single "Jamb" Stud Profile as Header Framing
- Flush Profile Installation no BuildupCracking or Excess "Floating" Around Openings to Level
- Eliminate "Box" Header Assemblies and Custom Shaped Profiles
- No Field Modification to Cut, Grind, Form, and or Buildup of "Tabbed" Ends
- Eliminate "Cripple Track" and Buildup Above Header Profile
- No "Pre-Insulation" - Avoid Insulation Exposure and Moisture Retention Issues

- Universal Clip for Jamb Attachment, Header Stiffening/ Support, and Cripple Stud Attachment
- Slotted to Accommodate Header Return Stiffening Lips
- "Center Rib" for Increased Strength
- 1.00" Legs allow "Throat" or alternate "Back to Back" Cripple Attachment

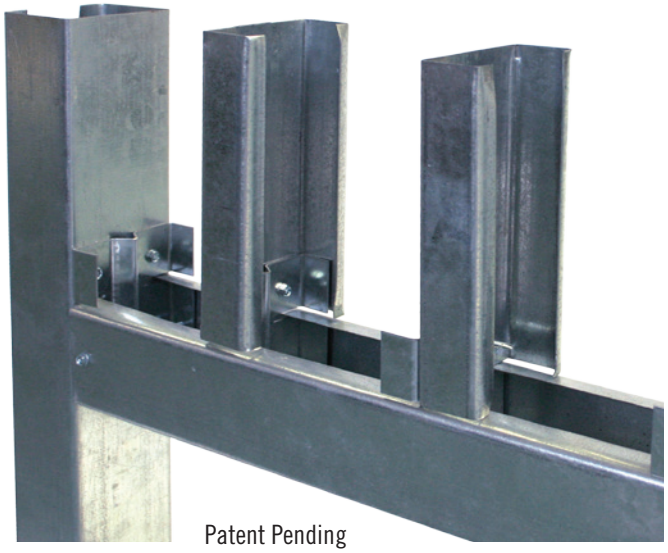

Patent Pending

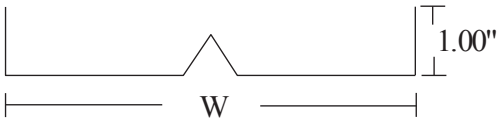

- 16ga - 2.00" to 3.50" Flange Widths
- 18ga - 1.25" to 1.625" Flange Widths

Part #	Header	Clip O/D
362HJC - 54	3 5/8"	3 1/2"
600HJC - 54	6"	5 7/8"

Now available through Super Stud Building Products, Inc. • To order: 800-477-7883 www.buysuperstud.com
Additional Technical Information: Safti-Seal 425-869-2811 or Super Stud: 732-662-6220

HJC CLIP SINGLE PIECE HEADER SPAN TABLE (INTERIOR)

5 POUNDS PER SQUARE FOOT (PSF) LATERAL PRESSURE, AND 10 PSF DEAD LOAD. MINIMUM HEAD HEIGHT = 7'-0".

		Wall Height 9'		Wall Height 12'		Wall Height 15'		Wall Height 20'	
Super Stud Header Member	AISI Member Name	Max Span	Head to Jamb	Max Span L/240	Head to Jamb	Max Span L/240	Head to Jamb	Max Span L/240	Head to Jamb
3-5/8 DW 33	362S125-33	4'-3"	T4	2'-10"	T4	2'-3"	T4	--	--
3-5/8SJW20	362S200-33	7'-3"	T1	5'-0"	T1	4'-1"	T1	3'-3"	T1
3-5/8SJW18	362S200-43	8'-7"	T1	5'-10"	T1	4'-8"	T1	3'-9"	T1
3-5/8SJW16	362S200-54	9'-8"	T1	7'-1"	T1	6'-1"	T1	5'-1"	T1
3-5/8SSX20	362S300-33	8'-6"	T1	6'-4"	T1	5'-2"	T1	4'-2"	T2
3-5/8SSX18	362S300-43	10'-7"	T1	7'-5"	T1	6'-0"	T1	4'-10"	T1
3-5/8SSX16	362S300-54	13'-4"	T2	9'-10"	T1	8'-2"	T1	6'-7"	T1
3-5/8SSX14	362S300-68	14'-4"	T2	10'-6"	T2	9'-0"	T2	7'-4"	T2
4 DW 33	400S125-33	4'-4'	T4	2'-10'	T4	2'-3"	T4	--	--
4SJW20	400S200-33	7'-6"	T1	5'-1"	T1	4'-1"	T1	3'-3"	T1
4SJW18	400S200-43	8'-9"	T1	5'-11"	T1	4'-9"	T1	3'-9"	T1
4SJW16	400S200-54	9'-9"	T1	7'-2"	T1	6'-1"	T1	5'-2"	T1
4SSX20	400S300-33	9'-3'	T1	6'-6"	T1	5'-3"	T1	4'-2"	T1
4SSX18	400S300-43	10'-9"	T1	7'-6"	T1	6'-1"	T1	4'-11"	T1
4SSX16	400S300-54	13'-6"	T2	9'-11"	T1	8'-3"	T1	6'-8"	T1
4SSX14	400S300-68	14'-6"	T2	10'-8"	T2	9'-1"	T2	7'-6"	T2
6 DW 33	600S125-33	4'-6"	T4	2'-11"	T4	2'-4"	T4	--	--
6SJW20	600S200-33	8'-0"	T1	5'-3"	T1	4'-3"	T1	3'-4"	T1
6SJW18	600S200-43	9'-3"	T1	6'-2"	T1	4'-11"	T1	3'-10"	T1
6SJW16	600S200-54	10'-0"	T1	7'-4"	T1	6'-3"	T1	5'-3"	T1
6SSX20	600S300-33	10'-1"	T1	6'-10"	T1	5'-6"	T2	4'-5"	T2
6SSX18	600S300-43	11'-9"	T2	8'-0"	T1	6'-5"	T2	5'-1"	T1
6SSX16	600S300-54	13'-10"	T2	10'-1"	T2	8'-7"	T2	7'-0"	T2
6SSX14	600S300-68	15'-2"	T2	11'-1"	T2	9'-5"	T2	7'-10"	T2
8SJW18	800S200-43	--	--	--	--	5'-0"	T1	3'-11"	T1
8SJW16	800S200-54	--	--	--	--	6'-3"	T1	5'-4"	T1
8SSX18	800S300-43	--	--	--	--	6'-7"	T1	5'-2"	T1
8SSX16	800S300-54	--	--	--	--	8'-8"	T2	7'-1"	T2
8SSX14	800S300-68					9'-7"	T2	8'-0"	T2

TABLE NOTES:

1. Design based on Super Stud header members of the material and thickness shown.
2. Spans based on header properties only and do not consider jamb stud capacity. Jamb design is not included in these tables.
3. Header spans are based on uniform loading conditions indicated in table only. Members have not been analyzed for point loads.
4. Contact Super Stud or BlazeFrame for framing Conditions not indicated.
5. Minimum distance from bottom of stud to header connection is 7'-0". Maximum spacing of cripple studs is 24" on center.
6. All calculations based on 2009 International Building Code (IBC). a reduction factor is applied to wind load to evaluate lateral deflection based on IBC table 1604.3.
7. Attach cripple studs to head with HJC Clip: use (2) #10 screws through center of header member flange into flange of HJC clip, and use (2) #10 screws from HJC clip to cripple stud. NOTE: SCREWS MUST BE INSTALLED THROUGH PILOT HOLES IN HJC CLIP: HEAD OF SCREW MUST BE ON HJC CLIP SIDE, NOT CRIPPLE STUD SIDE.
8. Analysis assumes sheathing on at least one side of wall, attached to jambs, header and cripples.
9. See head to Jamb Connection details T1 through T4 for configuration of connection between header and jamb using HJC clips.

Now available through Super Stud Building Products, Inc. • To order: 800-477-7883 www.buysuperstud.com
Additional Technical Information: Safti-Seal 425-869-2811 or Super Stud: 732-662-6220

HJC CLIP SINGLE PIECE HEADER SPAN TABLE (EXTERIOR)

20 POUNDS PER SQUARE FOOT (PSF) WIND PRESSURE, AND 12 PSF DEAD LOAD. MINIMUM HEAD HEIGHT = 7'-0".

		Wall Height 9'			Wall Height 12'			Wall Height 15'		
Super Stud Header Member	AISI Member Name	Max Span	Max Span L/360	Head to Jamb	Max Span L/240	Max Span L/360	Head to Jamb	Max Span L/240	Max Span L/360	Head to Jamb
3-5/8SJW20	362S300-33	5--10"	5--10"	T2	4'-6"	4'-6"	T2	3'-10"	3'-10"	T2
3-5/8SSX18	362S300-43	6'-10"	6'-10"	T2	5'-3"	5'-3"	T2	4'-5"	4'-5"	T2
3-5/8SSX16	362S300-54	9'-3"	9'-3"	T3	7'-0"	7'-0"	T3	6'-0"	6'-0"	T3
3-5/8SSX14	362S300-68	10'-6"	10'-6"	T3	8'-1"	8'-1"	T3	6'-10"	6'-10"	T3
3-5/8SSXW16	362S350-54	9'-6"	9'-6"	T3	7'-6"	7'-6"	T3	6'-4"	6'-4"	T3
3-5/8SSXW14	362S350-68	11'-0"	11'-0"	T3	8'-7"	8'-7"	T3	7'-3"	7'-3"	T3
4SSX20	400S300-33	6'-1"	6'-1"	T2	4'-8"	4'-8"	T2	3'-11"	3'-11"	T2
4SSX18	400S300-43	7'-2"	7'-2"	T2	5'-5"	5'-5"	T2	4'-7"	4'-7"	T2
4SSX16	400S300-54	9'-7"	9'-7"	T3	7'-3"	7'-3"	T3	6'-2"	6'-2"	T3
4SSX14	400S300-68	11'-0"	11'-0"	T3	8'-5"	8'-5"	T3	7'-1"	7'-1"	T3
4SSXW16	400S350-54	9'-11"	9'-11"	T3	7'-9"	7'-9"	T3	6'-7"	6'-7"	T3
4SSXW14	400S350-68	11'-6"	11'-6"	T3	8'-11"	8'-11"	T3	7'-6"	7'-6"	T3
6SSX20	600S300-33	7'-1"	7'-1"	T2	5'-3"	5'-3"	T2	4'-3"	4'-3"	T2
6SSX18	600S300-43	8'-4"	8'-4"	T3	6'-2"	6'-2"	T3	5'-1"	5'-1"	T3
6SSX16	600S300-54	11'-3"	11'-3"	T3	8'-4"	8'-4"	T3	6'-11"	6'-11"	T3
6SSX14	600S300-68	13'-0"	13'-0"	T3	9'-5"	9'-5"	T3	7'-11"	7'-11"	T3
6SSXW16	600S350-54	11'-10"	11'-10"	T3	8'-11"	8'-11"	T3	7'-5"	7'-5"	T3
6SSXW14	600S350-68	13'-9"	13'-9"	T3	10'-3"	10'-3"	T3	8'-6"	8'-6"	T3
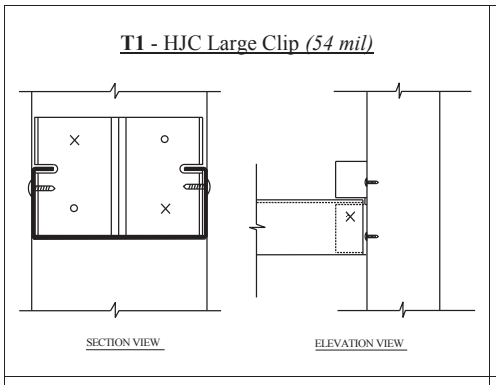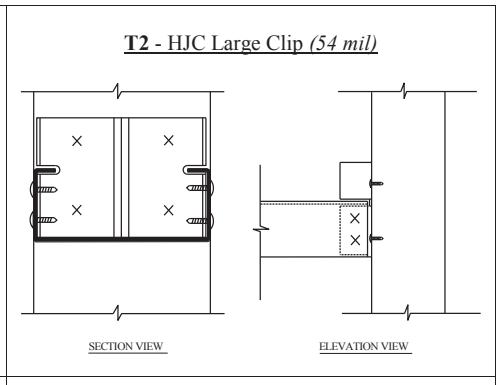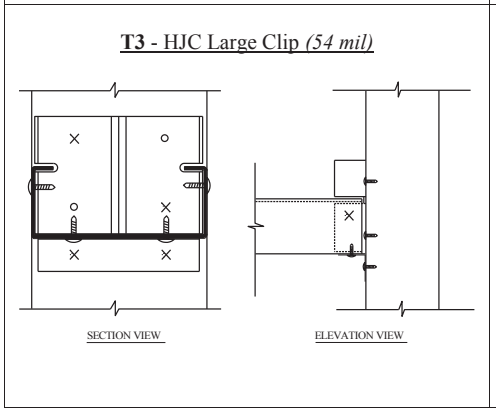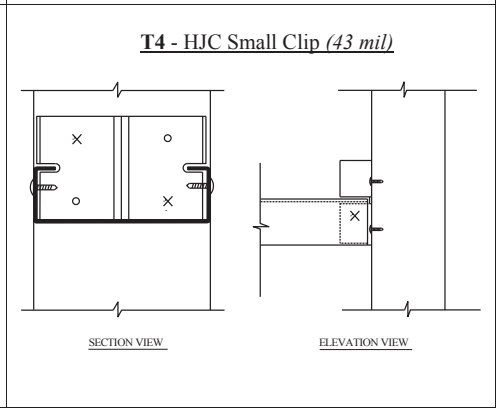
HEAD TO JAMB CONNECTIONS